Current part is item (17) on diagram. Available at www.oshkoshequipment.com

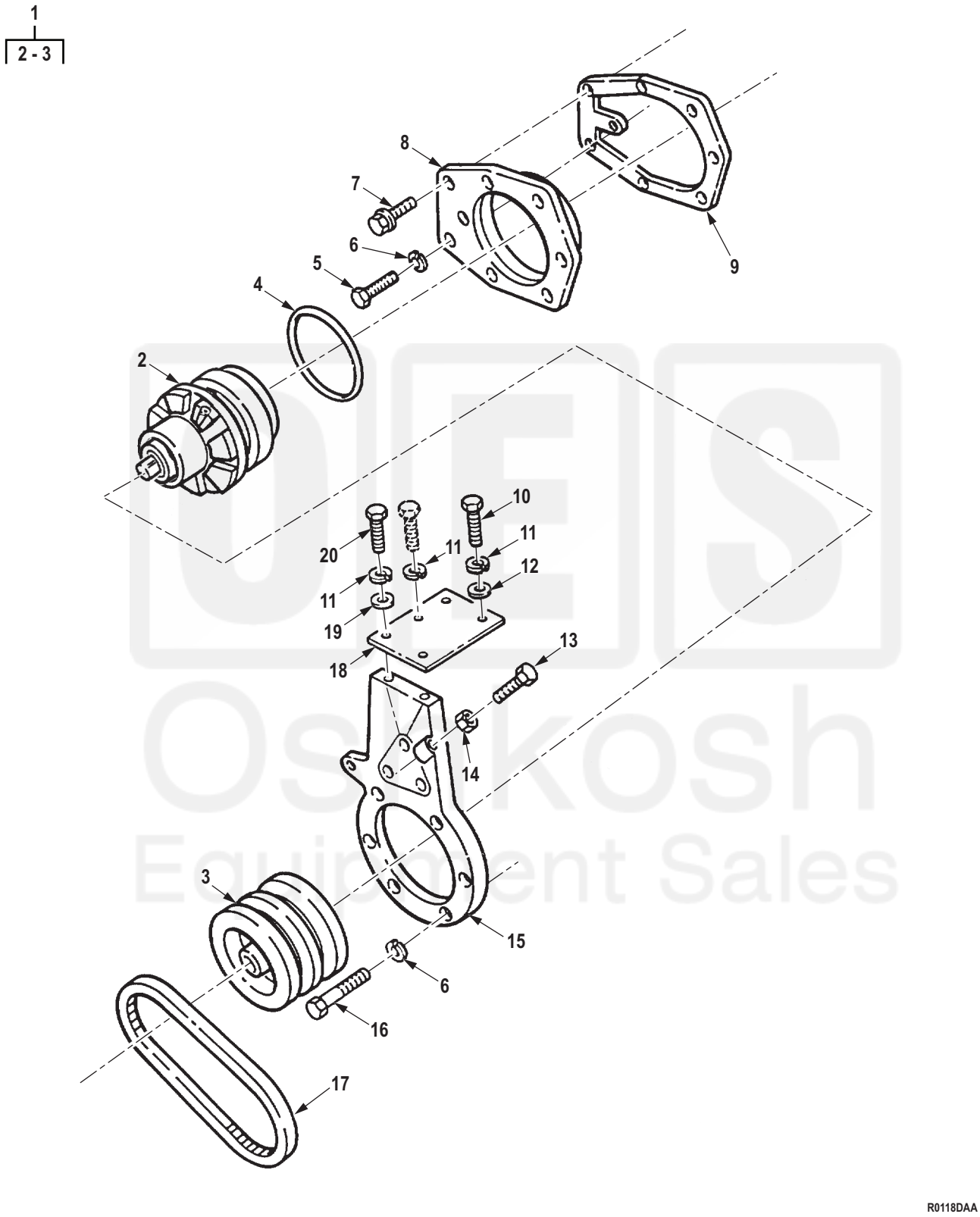

Figure 118. Water Pump Assembly, Seals, and Mounting Hardware (M939, M939A1).

Current part is item (17) on diagram. Available at www.oshkoshequipment.com

Current part is item (17) on diagram. Available at www.oshkoshequipment.com

(1) ITEM NO.	(2) SMR CODE	(3) NSN	(4) CAGEC	(5) PART NUMBER	(6) DESCRIPTION AND USABLE ON CODE (UOC)	(7) QTY
11	PAFZZ	5310-00-003-4094	80205	MS35338-48	WASHER,LOCK UOC: DAC,DAD,DAE,DAF,DAG,DAH,DAJ,DAL,DAW,DAX,V14,V15,V16,V17,V18,V19,V20,V21,V22,V24	7
12	PAFZZ	5310-00-930-7013	11083	4B4280	WASHER,FLAT UOC: DAC,DAD,DAE,DAF,DAG,DAH,DAJ,DAL,DAW,DAX,V14,V15,V16,V17,V18,V19,V20,V21,V22,V24	2
13	PAFZZ	5305-01-091-2498	15434	166777	SCREW UOC: DAC,DAD,DAE,DAF,DAG,DAH,DAJ,DAL,DAW,DAX,V14,V15,V16,V17,V18,V19,V20,V21,V22,V24	1
14	PAFZZ	5310-00-470-6154	15434	S285	NUT,PLAIN,HEXAGON UOC: DAC,DAD,DAE,DAF,DAG,DAH,DAJ,DAL,DAW,DAX,V14,V15,V16,V17,V18,V19,V20,V21,V22,V24	1
15	PBFZZ	5342-01-134-3860	15434	147588	BRACKET,FAN SUPPORT UOC: DAC,DAD,DAE,DAF,DAG,DAH,DAJ,DAL,DAW,DAX,V14,V15,V16,V17,V18,V19,V20,V21,V22,V24	1
16	PAFZZ	5305-00-914-6131	80204	B1821BH038F175D	SCREW,CAP,HEXAGON H UOC: DAC,DAD,DAE,DAF,DAG,DAH,DAJ,DAL,DAW,DAX,V14,V15,V16,V17,V18,V19,V20,V21,V22,V24	6
17	PAFZZ	3030-01-200-6004	15434	3019061	BELT,V UOC: DAC,DAD,DAE,DAF,DAG,DAH,DAJ,DAL,DAW,DAX,V14,V15,V16,V17,V18,V19,V20,V21,V22,V24	1
18	PAFZZ	2930-01-196-7521	15434	131622	BRACE,FAN SUPPORT UOC: DAC,DAD,DAE,DAF,DAG,DAH,DAJ,DAL,DAW,DAX,V14,V15,V16,V17,V18,V19,V20,V21,V22,V24	1
19	PAFZZ	5310-00-595-6153	11083	1F7960	WASHER,FLAT UOC: DAC,DAD,DAE,DAF,DAG,DAH,DAJ,DAL,DAW,DAX,V14,V15,V16,V17,V18,V19,V20,V21,V22,V24	2
20	PAFZZ	5305-01-209-7068	15434	69952	SCREW,CAP,HEXAGON H UOC: DAC,DAD,DAE,DAF,DAG,DAH,DAJ,DAL,DAW,DAX,V14,V15,V16,V17,V18,V19,V20,V21,V22,V24	2

END OF FIGURE

Current part is item (17) on diagram. Available at www.oshkoshequipment.com